Electronic fuel injection, fuel pump, injectors

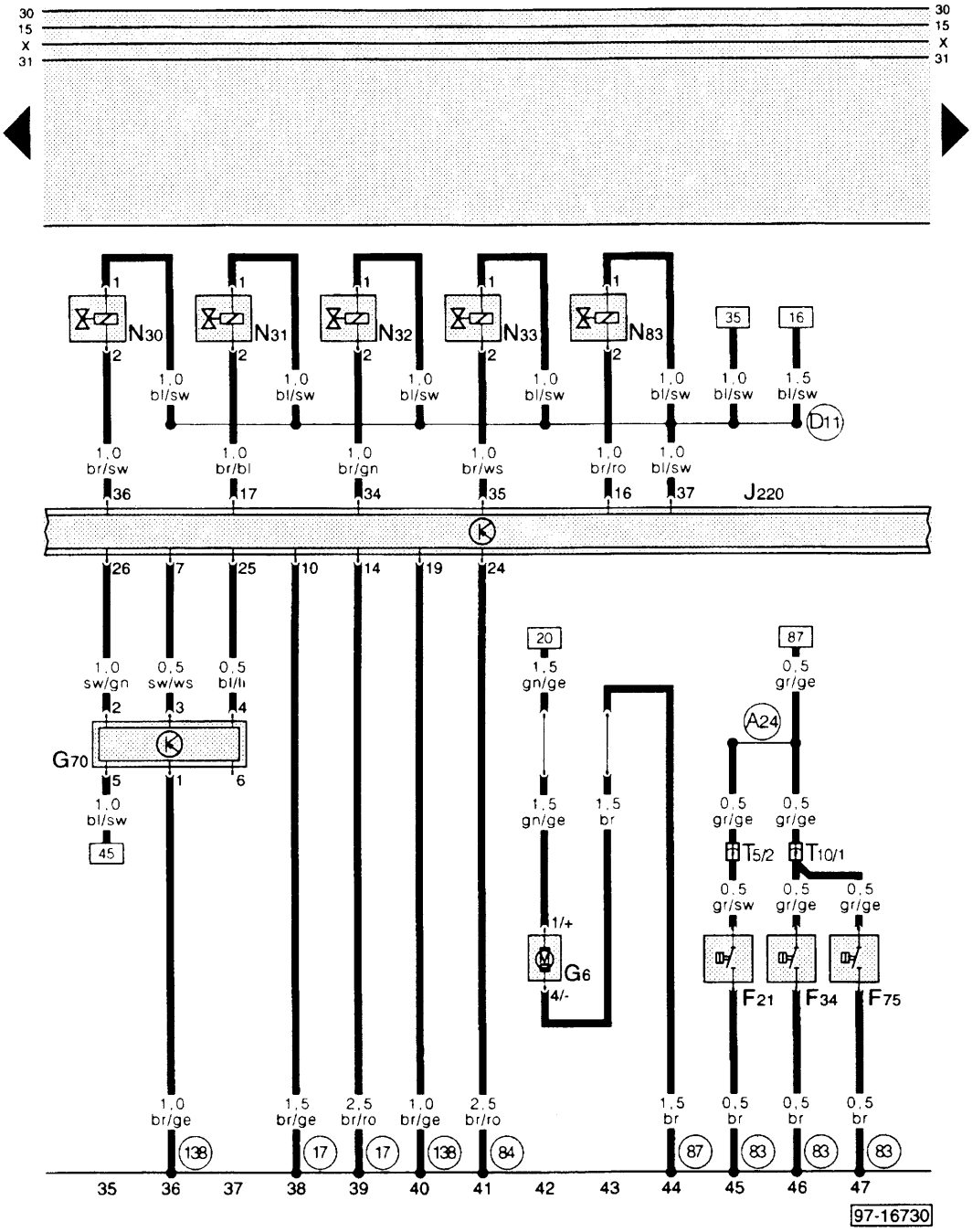

bl	=	blue
br	=	brown
ge	=	yellow
gn	=	green
gr	=	grey
li	=	purple
ro	=	red
sw	=	black
ws	=	white

F 21 - Hydraulic servo unit warning switch
F 34 - Brake fluid level wiring contact
F 75 - Hydraulic fluid warning contact
G 6 - Fuel pump (lift pump)
G 70 - Air mass meter
J 220 - Motronic control unit
N 30 - Injector, cylinder 1
N 31 - Injector, cylinder 2
N 32 - Injector, cylinder 3
N 33 - Injector, cylinder 4
N 83 - Injector, cylinder 5
T 5 - Connector, 5-pin, black, connector point in aux. relay carrier
T 10 - Connector, 10-pin, black, connector point in aux. relay carrier

(17) - Earth point, on intake manifold

(83) - Earth connection -1-, in front right wiring loom
(84) - Earth connection, engine block, in front right wiring loom
(87) - Earth connection -2-, in rear wiring loom
(138) - Earth connection (control unit), in Motronic wiring loom
(A24) - Connection (Brake system monitoring), in dash panel wiring loom
(D11) - Positive (+) connection (15), via fuse 28 in front right wiring loom